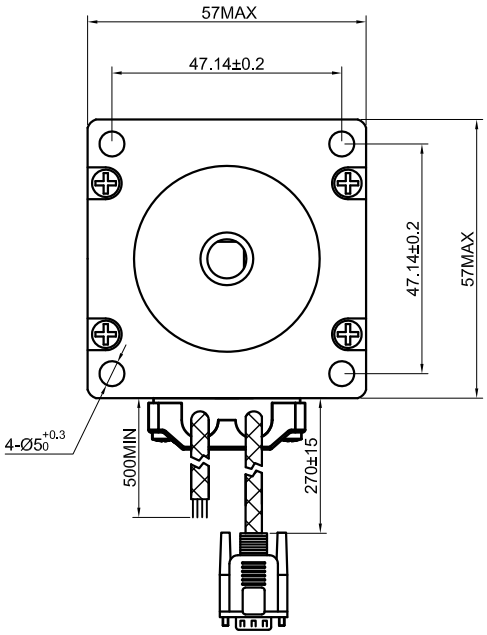

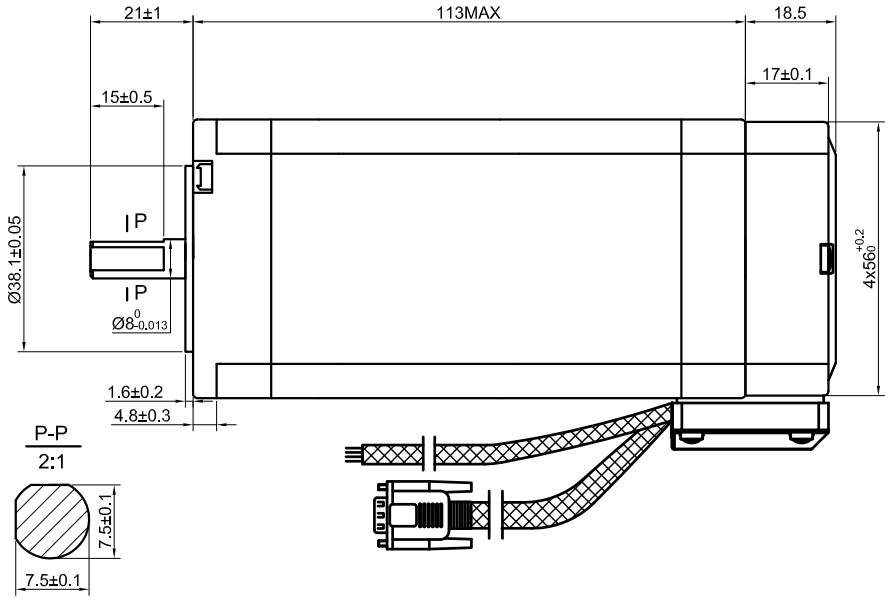

SPECIFICATION / CONNECTION	BIPOLAR
VOTAGE(VOC)	3.78
AMPS/PHASE	4.20
RESISTANCE/PHASE(Ohms)@25°C	0.90±10%
INDUCTANCE/PHASE(mH)@1KHz	3.80±20%
HOLDING TORQUE(Nm)[lb-in]	2.80[24.78]
STEP ANGLE(°)	1.80
STEP ACCURACY(NON-ACCUM)	±5.00%
LEAD STYLE	FVR 4X0.5mm² CABLE
LIFE(h)	6000
TEMPERATURE RISE:MAX.80°C（MOTOR STANDSTILL;FOR 2PHASE ENERGIZED）	
AMBIENT TEMPERATURE -10°C~50°C[14°F~122°F]	
INSULATION RESISTANCE 100 Mohm（UNDER NORMAL TEMPERATURE AND HUMIDITY）	
INSULATION CLASS B 130°C[266°F]	
DIELECTRIC STRENGTH 500VAC FOR 1MIN.(BETWEEN THE MOTOR COILS AND THE MOTOR CASE)	
AMBIENT HUMIDITY MAX.85%(NO CONDENSATION)	

TYPE OF CONNECTION (EXTERN)		MOTOR	
PIN NO	BIPOLAR	LEADS	WINDING
1	A —	GRN	A
2	A\ —	RED	A\
3	B —	YEL	B
4	B\ —	BLU	B\

DB MALE PLUG

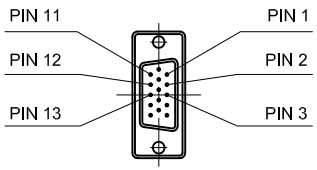

15-PIN DB MALE PLUG	1	2	3	11	12	13
LEAD COLOR	BLK	RED	WHT	YEL	GRN	BLU
DESCRIPTION	EA+	VCC	GND	EB+	EB-	EA-

CNC REPOWERING
AUTOMATIZACIÓN INDUSTRIAL

	APVD		
	CHKD		
1:1.5	DRN		
SCALE	SIGNATURE		DATE

STEPPER SERVOMOTOR

23HS45-4204D-E1000